10.1 Impact Crusher Parts

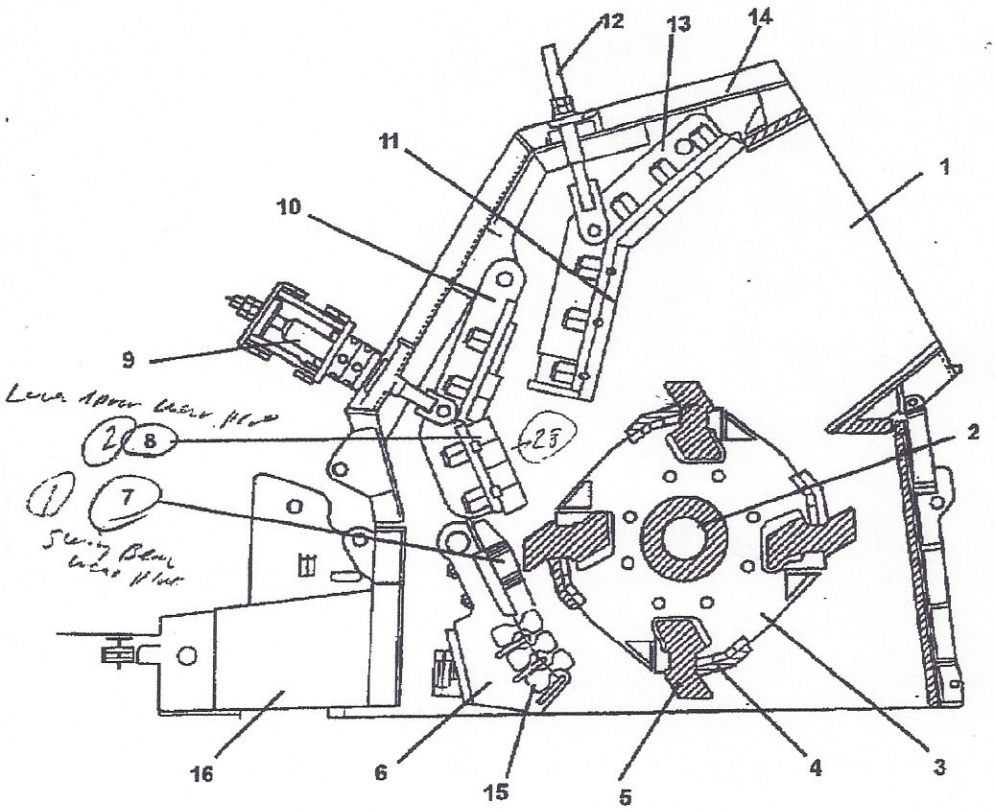

1 Feed Opening
2 Shaft
3 Impact Rotors
4 Rotor Liners
5 Blow Bars (Hammers)
6 Swing Beam
7 Swing Beam Wear Plates
8 Lower Apron Wear Plates
9 Lower Apron Adjustment
10 Lower Apron
11 Upper Apron Wear Plates
12 Upper Apron adjustment
13 Upper Apron
14 Crusher Mainframe
15 Swing Beam Rails
16 Swing Beam Adjustment

Impact Crusher Unit - 428 Trakpactor

9.6 Crusher - Adjustment

Adjustments are required to the impact crusher to enable the product size to be varied and to compensate for wear on the aprons, swingbeam and hammers. Refer to Section 3.4. Figure 3a for the setting gaps

WARNING

WEAR PERSONAL PROTECTIVE EQUIPMENT. Refer to Section 9.1, Safety Information for relevant warning.

LOCKOUT MACHINE. Refer to Section 9.1, Safety Information for Lockout Procedure.

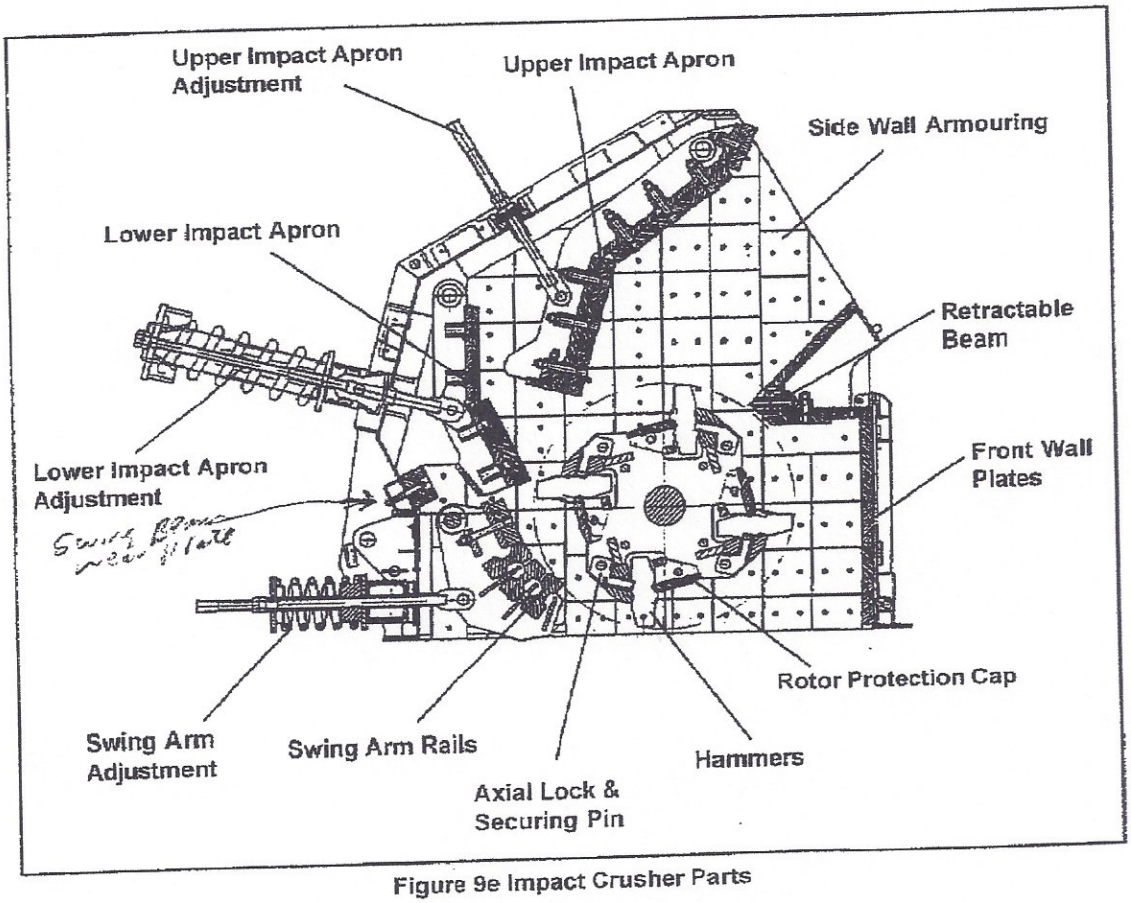

Figure 9e Impact Crusher Parts

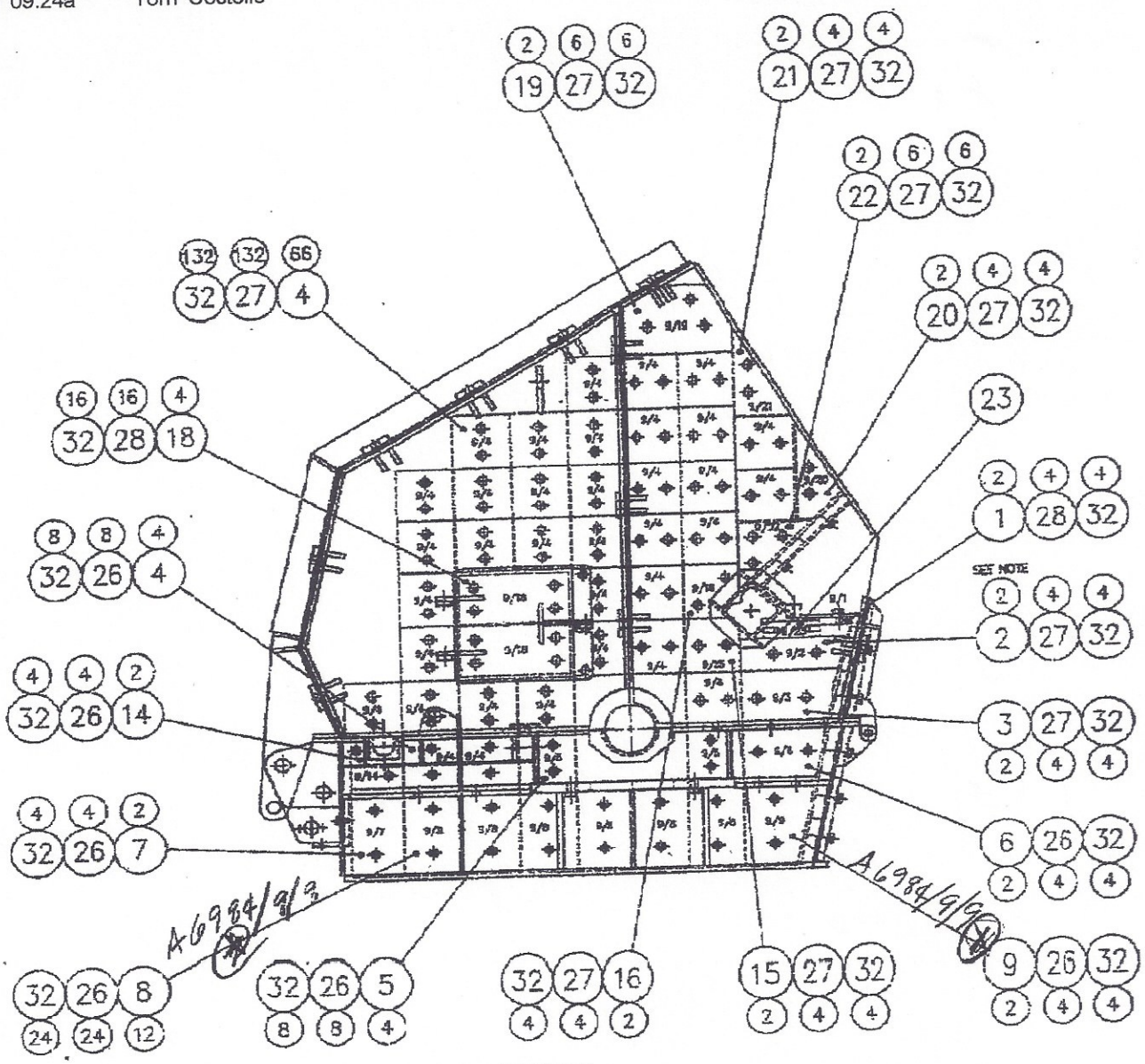

WEIGHT
.8 kgs EACH
.4 kgs EACH
.7 kgs EACH
.2 kgs EACH
.2 kgs EACH
.4 kgs EACH
.5 kgs EACH
.5 kgs EACH
.2 kgs EACH
.3 kgs EACH
.8 kgs EACH
.8 kgs EACH
.2 kgs EACH
.5 kgs EACH
.5 kgs EACH
.8 kgs EACH

ITEM	PART No.	DESCRIPTION	QTY	WEIGHT
17	A6984/9/17	LINER PLATE	4	29 kgs EACH
18	A6984/9/18	LINER PLATE	4	11 kgs EACH
19	A6984/9/19	LINER PLATE	2	13 kgs EACH
20	A6984/9/20	LINER PLATE	2	5.2 kgs EACH
21	A6984/9/21	LINER PLATE	2	5.2 kgs EACH
22	A6984/9/22	LINER PLATE	2	5 kgs EACH
23	A6984/9/23	LINER PLATE	1	162 kgs
24				
25				
26	2222-0297	SCREW-HEX SKT-CAP HD M20x35.	56	
27	2230-1285	SCREW-HEX HD M20x35.	174	
28	2230-1287	SCREW-HEX HD M20x45.	28	
29				
30	2232-1280	BOLT-HEX HD M20x75.	20	
31				
32	2211-0012	WASHER-SPRING #20.	278	

NOTE:
LINER PART No. A6984/23 MUST BE EITHER REMOVED OR SUPPORTED BEFORE ATTEPTING TO REMOVE LINERS PART No. A6984/2.

SURFACE TEXTURE	STANDARD LIMITS	MATERIAL
MACHINE AT LIMIT UNLESS OTHERWISE STATED TO BE ✓ MAX	ALL DIMENSIONS ARE IN MILLIMETRES UNLESS OTHERWISE STATED UNSPECIFIED LIMITS ± 0.5 MACHINED ± 1.0 UNMACHINED	HEAT TREATMENT— [illegible]

© THIS DOCUMENT IS THE COPYRIGHT OF M. PEGRON LTD. IT MUST NOT BE LOANED, COPIED, OR REPRODUCED WITHOUT THE WRITTEN PERMISSION OF THE COMPANY.

DESIGN	CHECKED	APP'D
JJ		KP
09/03/00		09/03/00

A10A10 843/13/3 Liner ?

Also Briefly under

10.1.3 Impact Crusher - Mainframe Liner Plates

REF	PART NUMBER	DESCRIPTION	QUANTITY
1	A6984/9/1	LINER PLATE	2
2	A6984/9/2	LINER PLATE	2
3	A6984/9/3	LINER PLATE	2
4	A6984/9/4	LINER PLATE	70
5	A6984/9/5	LINER PLATE	4
6	A6984/9/6	LINER PLATE	2
7	A6984/9/7	LINER PLATE	2
8	A6984/9/8	LINER PLATE	12
9	A6984/9/9	LINER PLATE	2
10	A6984/9/10	LINER PLATE	3
11	A6984/9/11	LINER PLATE	6
12	A6984/9/12	LINER PLATE	2
13	A6984/9/13	LINER PLATE	2
14	A6984/9/14	LINER PLATE	2
15	A6984/9/15	LINER PLATE	2
16	A6984/9/16	LINER PLATE	2
17	A6984/9/17	LINER PLATE	4
18	A6984/9/18	LINER PLATE	4
19	A6984/9/19	LINER PLATE	2
20	A6984/9/20	LINER PLATE	2
21	A6984/9/21	LINER PLATE	2
22	A6984/9/22	LINER PLATE	2
23	A6984/9/23	LINER PLATE	1
24			
25			
26	2222-0297	SCREW-HEX SKT-CAP HD M20x35	56
27	2230-1285	SCREW-HEX HD M20x35	174
28	2230-1287	SCREW-HEX HD M20x45	28
29			
30	2232-1281	BOLT-HEX HD M20x75	20
31			
32	2211-0012	WASHER-SPRING M20	278

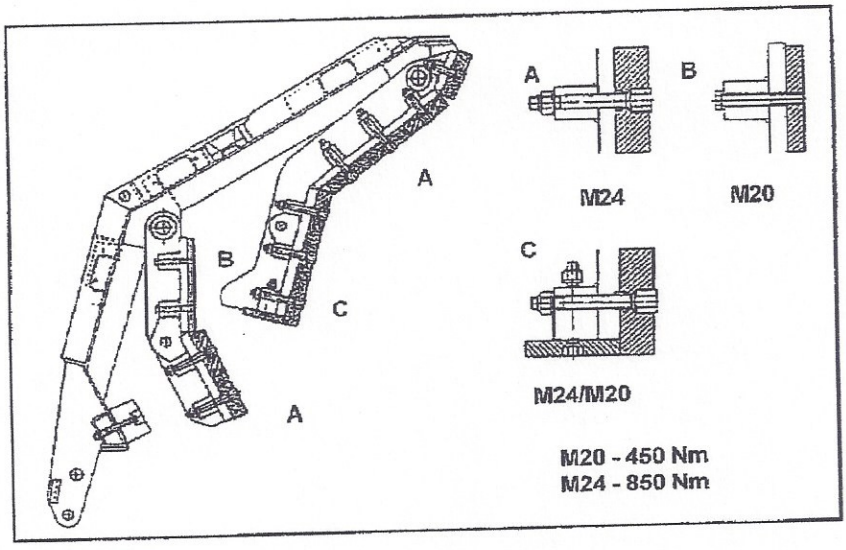

Figure 9n Upper & Lower Impact Plate Bolts - Tightening Torques

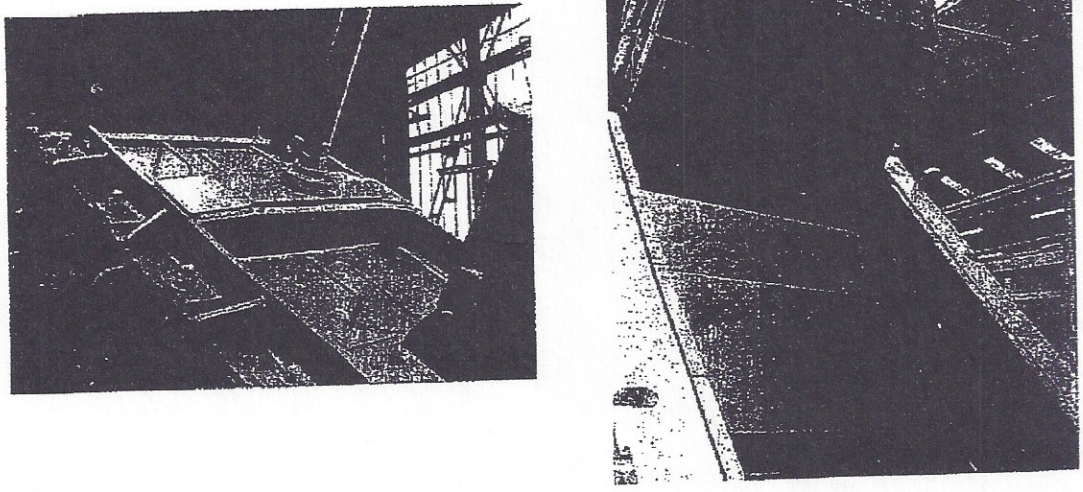

Figure 9o Upper Impact Apron Access Panels and Wear Plates

3rd ANGLE PROJECTION

DO NOT SCALE IF IN DOUBT ASK

Upper Curtain

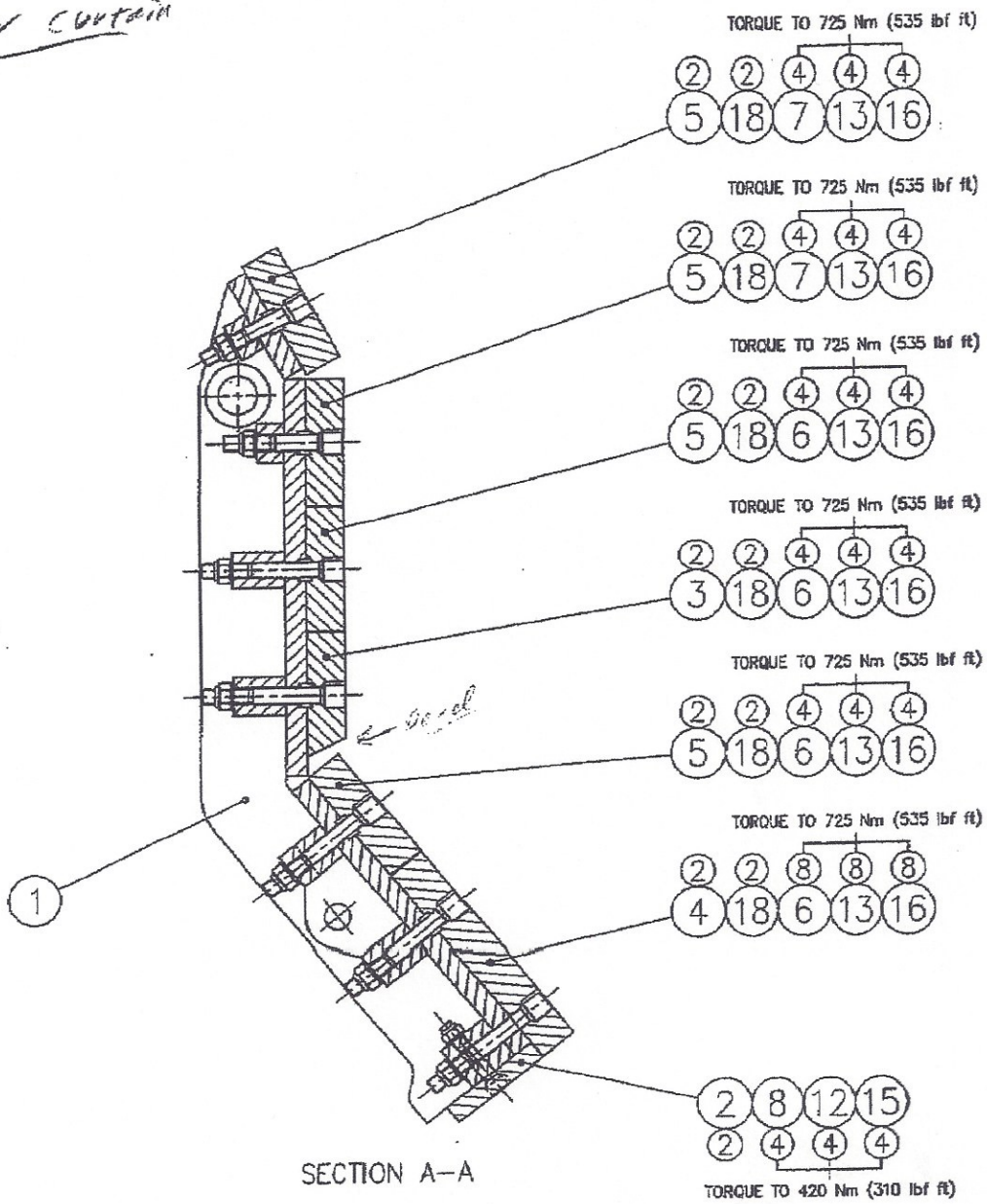

SECTION A–A

ITEM	PART No.	DESCRIPTION	QTY	WEIGHT
1	A6984/17	FRONT IMPACT APRON.	1	680 Kgs
2	A6984/9/25	LINER PLATE.	2	19.8 Kgs EACH
3	A6984/9/26	LINER PLATE.	2	43 Kgs EACH
4	A6984/9/27	LINER PLATE.	2	90 Kgs EACH
5	A6984/9/28	LINER PLATE.	8	47.2 Kgs EACH
6	A6984/25/1	SCREW – M24x220.	20	1 Kg EACH
7	A6984/25/2	SCREW – M24x185.	8	0.85 Kg EACH
8	A6984/25/3	SCREW – M24x135.	4	0.4 Kg EACH
9				
10				
11				
12	2210–0021	WASHER – PLAIN – FORM A ø20.	4	
13	2210–0023	WASHER – PLAIN – FORM A ø24.	28	
14				
15	2217–0009	NUT – HEX – PHILIDAS MKV M20.	4	
16	2217–0011	NUT – HEX – PHILIDAS MKV M24.	28	
17				
18	2432–0577	KEY – 36x20x200 SQ END.	12	1.15 Kg EACH

DO NOT SCALE
IF IN DOUBT ASK

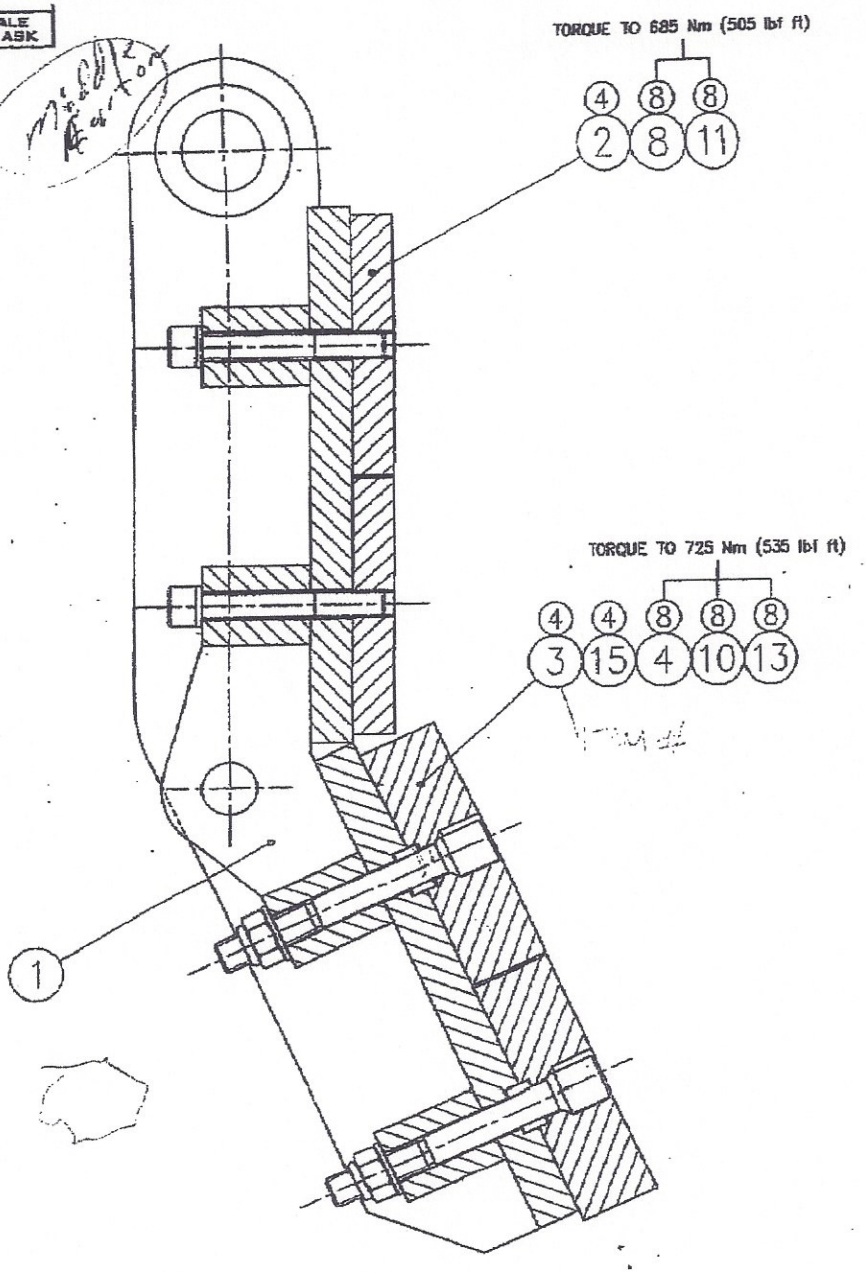

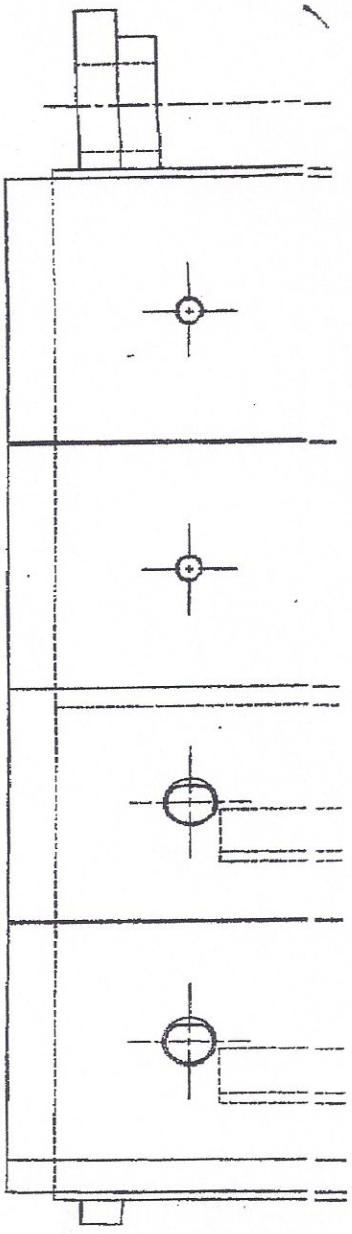

SECTION A–A

ITEM	PART No.	DESCRIPTION	QTY	WEIGHT
1	A6984/18	REAR IMPACT APRON.	1	435 Kgs
2	A6984/9/24	LINER PLATE.	4	24.2 Kgs EACH
3	A6984/9/28	LINER PLATE.	4	47.2 Kgs EACH
4	A6984/25/1	SCREW – M24x220.	8	1 Kg EACH
5				
6				
7				
8	2222–0313	SCREW – HEX SKT – CAP HD M20x140.	8	
9				
10	2210–0023	WASHER – PLAIN – FORM A ø24.	8	
11	2211–0012	WASHER – SPRING – SQ SECT ø20.	8	
12				
13	2217–0011	NUT – HEX – PHILIDAS MKV M24.	8	
14				
15	2432–0577	KEY – 36x20x200 SQ END.	4	1.15 Kg EACH

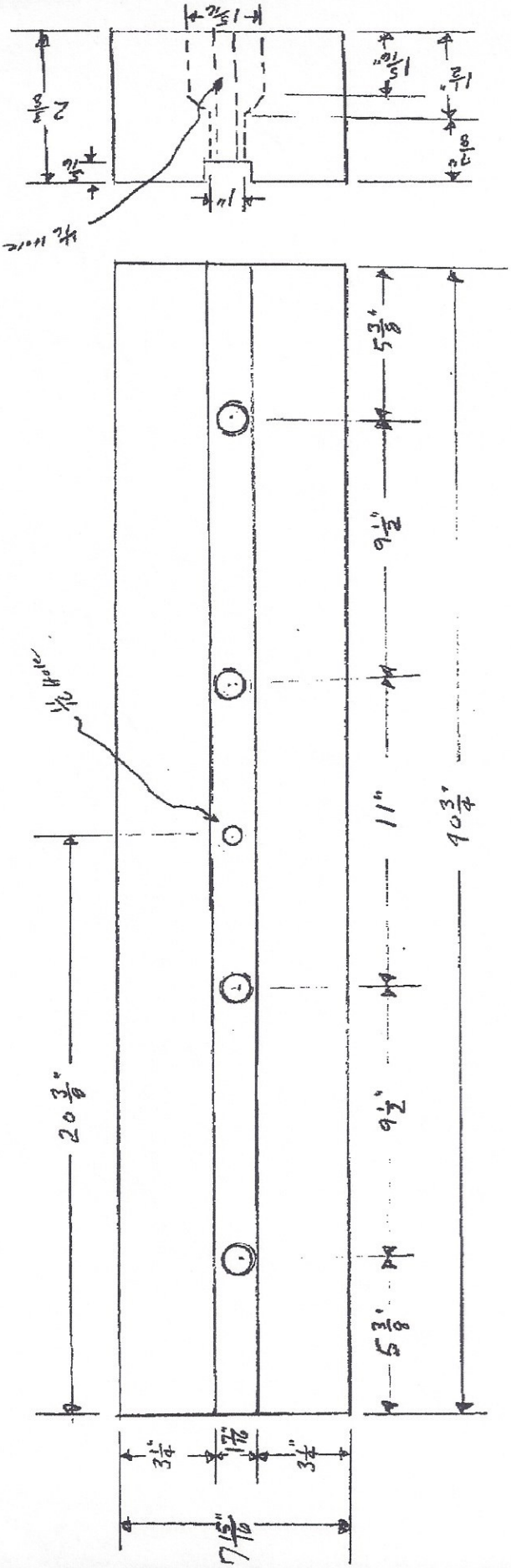

PEGSTON 428 TRANSPORTER
Wear plate
11/12/04
Tom Costello
Morton Supply
Bufordville Store

18 ft chrome 455 cm
10 inch [illegible]
OEM is mild steel